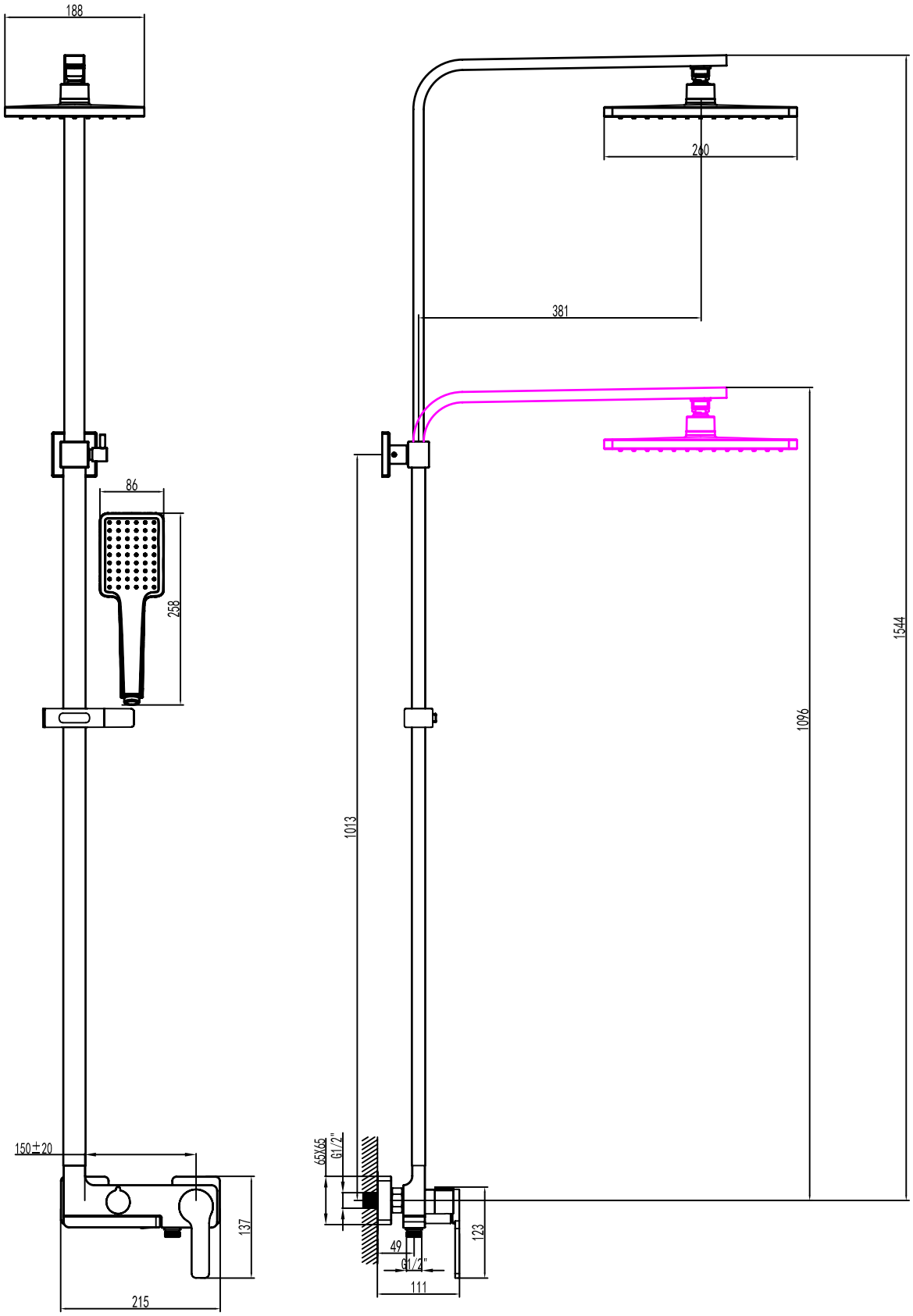
188
86
258
150±20
137
215
260
381
1013
1096
1544
65X65
G1/2"
49
G1/2"
111
123